[illegible]

[illegible]

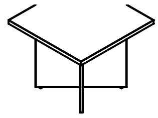

[illegible]
[illegible]
[illegible]

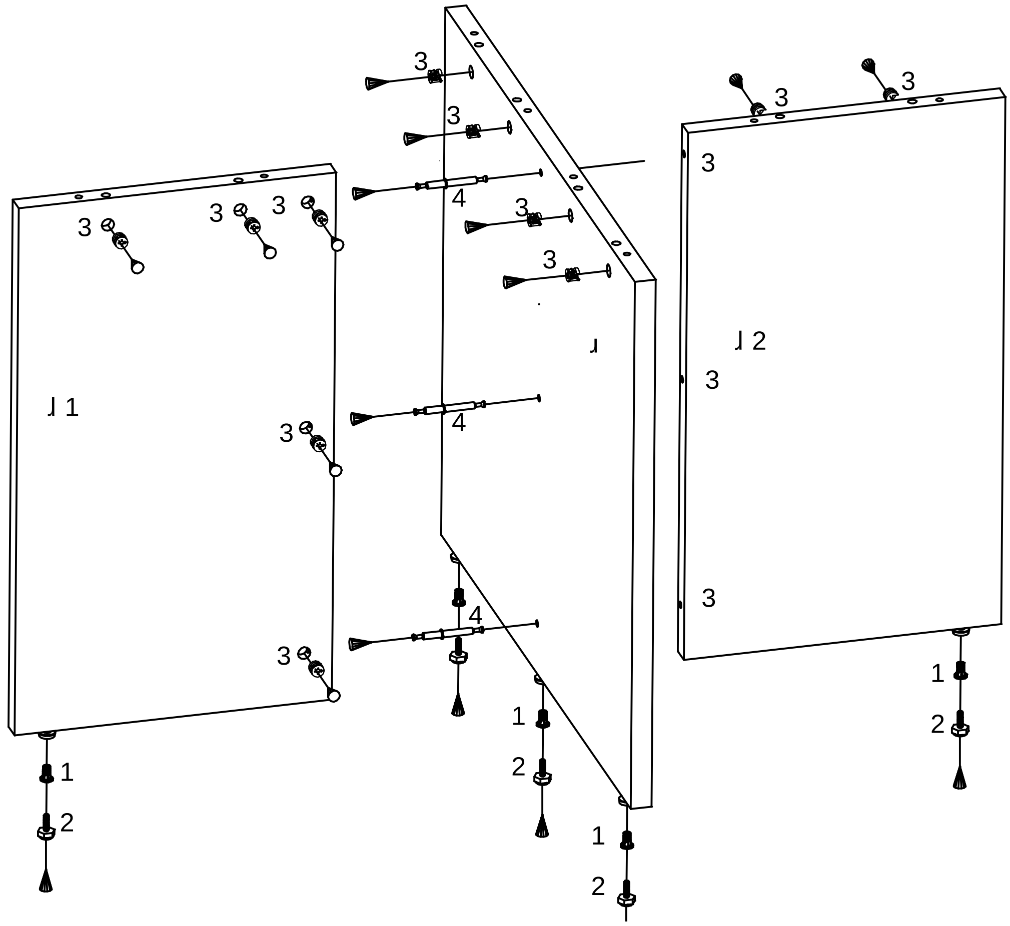

[illegible]

Во время стяжки боковин снять стопорное кольцо с двойного болта.

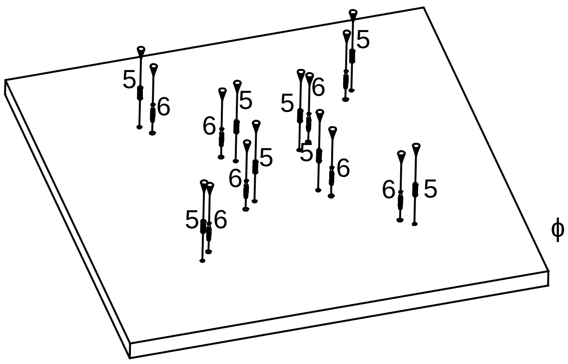

[illegible]

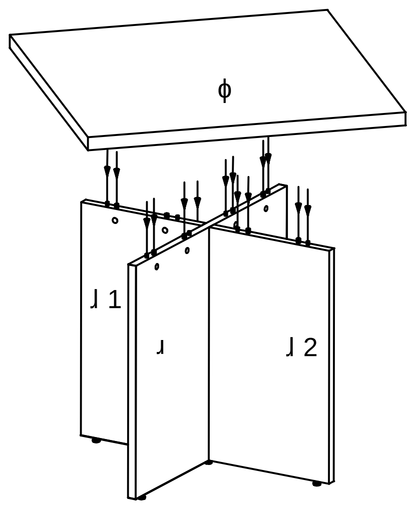

[illegible]
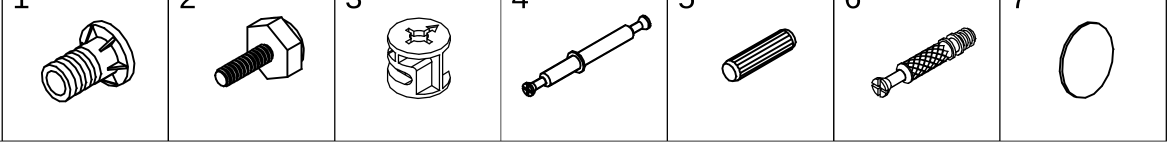
1	2	3	4	5	6	7